Model Name : CSS-1465

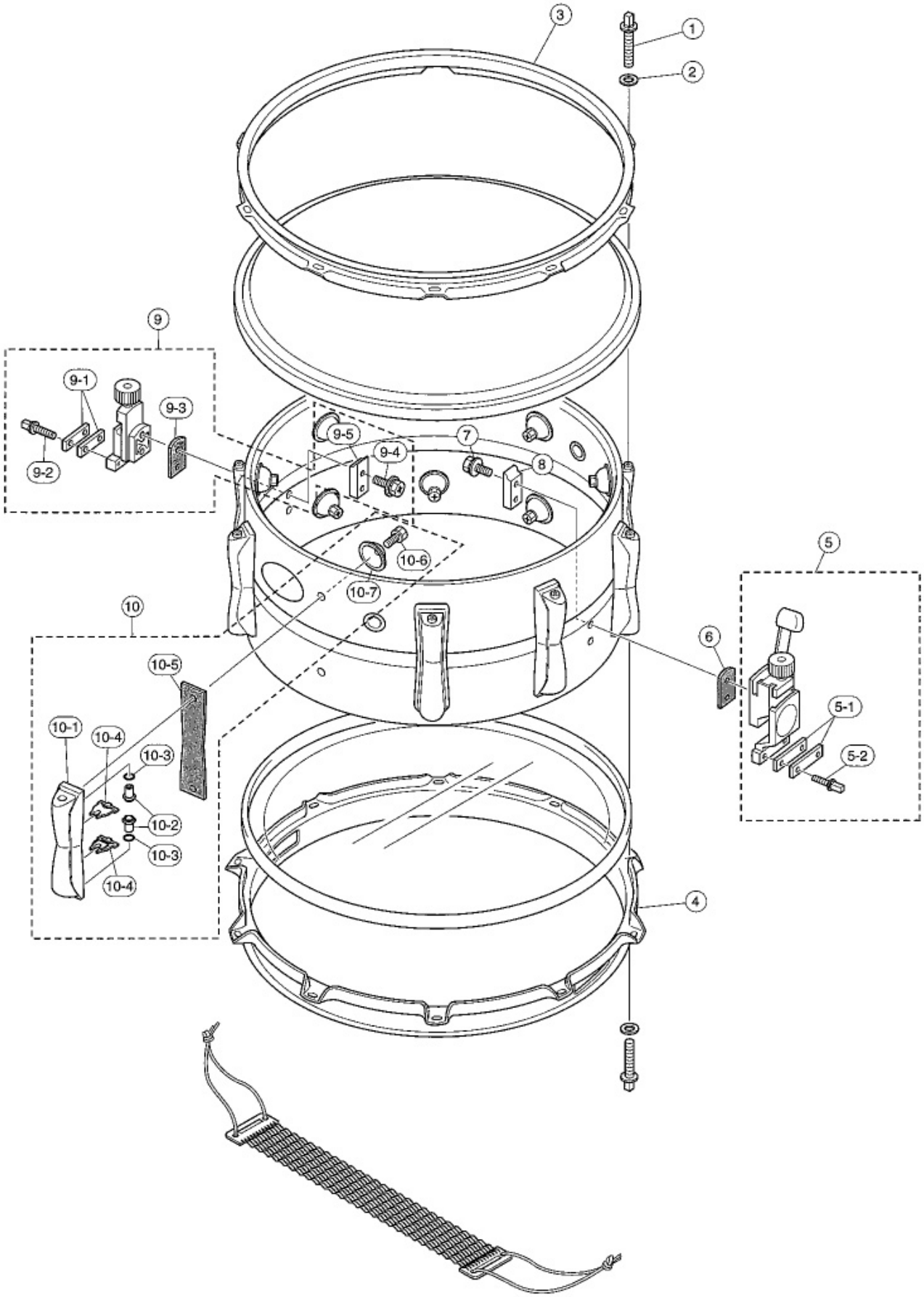

Model Name : CSS-1465

Ref No.	Parts No.(ChangeNo.)	English Name	Minimum Delivery	Accept order or not
1	U0043092	TENSION ROD L=60(N)	1 PC	
10	U0030902	LUG ASSY SD-4106/3105/2096	1 PC	
10-1	U0032690	SD LUG(2) VSD-246	1 PC	
10-2	U0033250	LUG NUT (5)	1 PC	
10-3	U0038050	RUBBER O RING	1 PC	
10-4	U0037071	SD-HT LUG NUT HOLD PLATE	1 PC	
10-5	U0147670	LUG PLATE SD-465MK/455MK	1 PC	
10-6	U0035450	HEXAGONAL BOLT/WASHER M4X12 ZY RSD-086	1 PC	
10-7	U0033010	SD CAP WASHER (M4)	1 PC	
2	U0045010	WASHER	1 PC	
3	U0066070	TRIPLE FLANGE HOOPS 14"X10H	1 PC	
4	U0066170	REGULAR HOOP 14X10HS1	1 PC	
5	U0201211	Strainer Release Side Complete(H) N ASSY	1 PC	
5-1	U0204210	SNARE HOLDING BASE (2) MSD-0104	1 PC	
5-2	U0603480	DRUM KEY BOLT M5X13 MSD-0104	1 PC	
6	U0207460	STRAINER (G)PLATE	1 PC	
7	U0035670	MOUNTING HEX BOLT WASHER M4X16 ZY	1 PC	
8	U0202270	SA HOLDING PLATE	1 PC	
9	U0200976	STRAINER(BUTT SIDE) SD4106/4105/3106	1 PC	
9-1	U0204210	SNARE HOLDING BASE (2) MSD-0104	1 PC	
9-2	U0603480	DRUM KEY BOLT M5X13 MSD-0104	1 PC	
9-3	U0207460	STRAINER (G)PLATE	1 PC	
9-4	U0035670	MOUNTING HEX BOLT WASHER M4X16 ZY	1 PC	
9-5	U0202270	SA HOLDING PLATE	1 PC	