Model Name : CB-628U

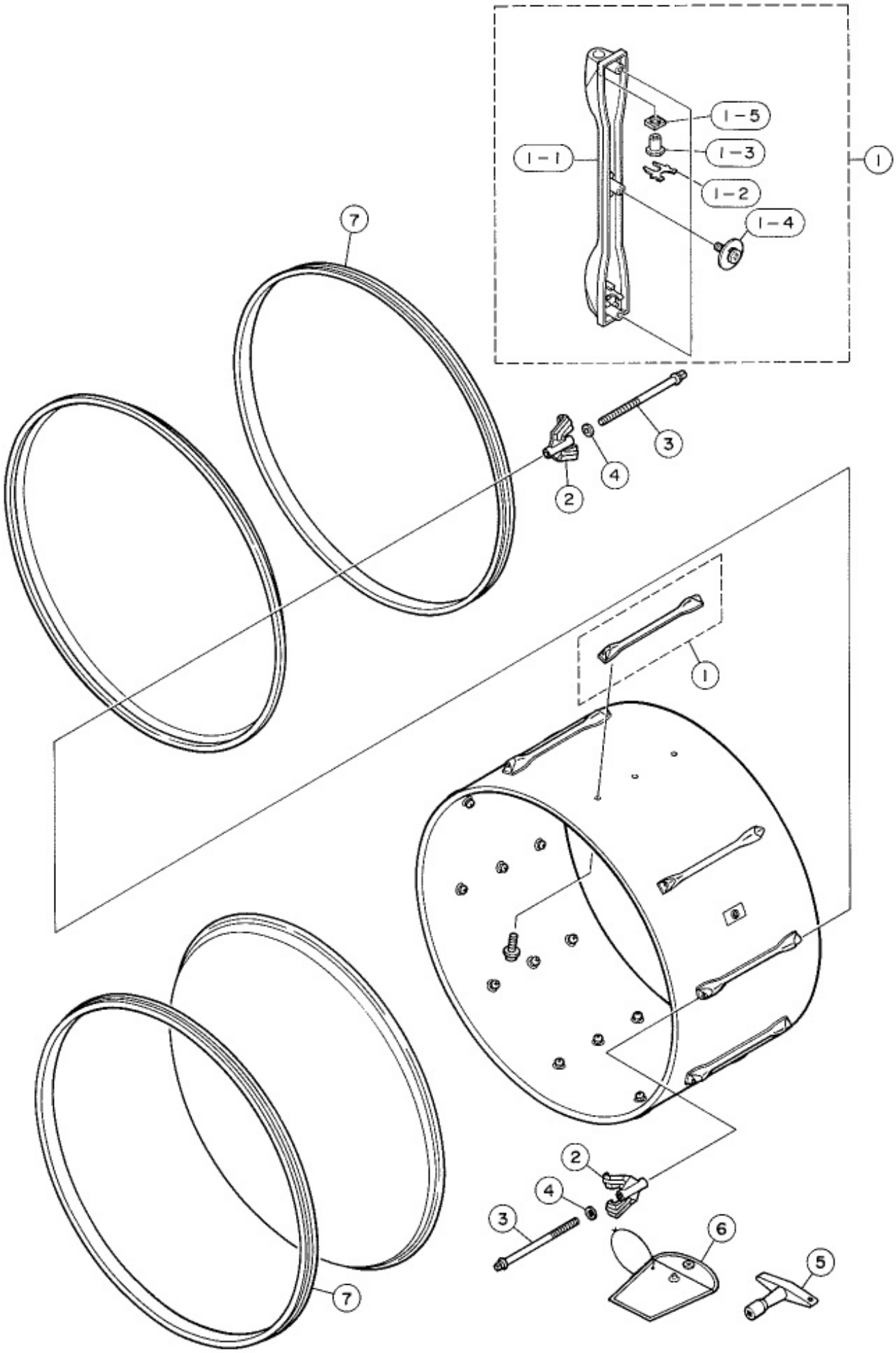

Model Name : CB-628U

Ref No.	Parts No.(ChangeNo.)	English Name	Minimum Delivery	Accept order or not
1	U0030251	BD-HT LUG (LARGE) N ASS'Y	1 PC	
1-1	U0032051	BD-HT LUG (LARGE) N	1 PC	
1-2	U0033290	LUG INSERTION PIECE BASS DRUM	1 PC	
1-3	U0033240	LUG NUT (4)	1 PC	
1-4	U0033320	LUG MOUNTING SCREW/WASHER 9000 SERIES BD	1 PC	
1-5	U0038020	LUG O RING	1 PC	
2	U0053060	RIM TENSION CLAW HOOK(6)	1 PC	
3	U0043132	TENSION ROD L=100	1 PC	
4	U0045010	WASHER	1 PC	
5	U0142010	DRUM KEY	1 PC	ORDER STOP
6	U0147010	DRUM KEY CASE	1 PC	ORDER STOP
7	U0072300	BASS HOOP 28"(BLACK) CB628	1 PC	