Model Name : MQ-8213

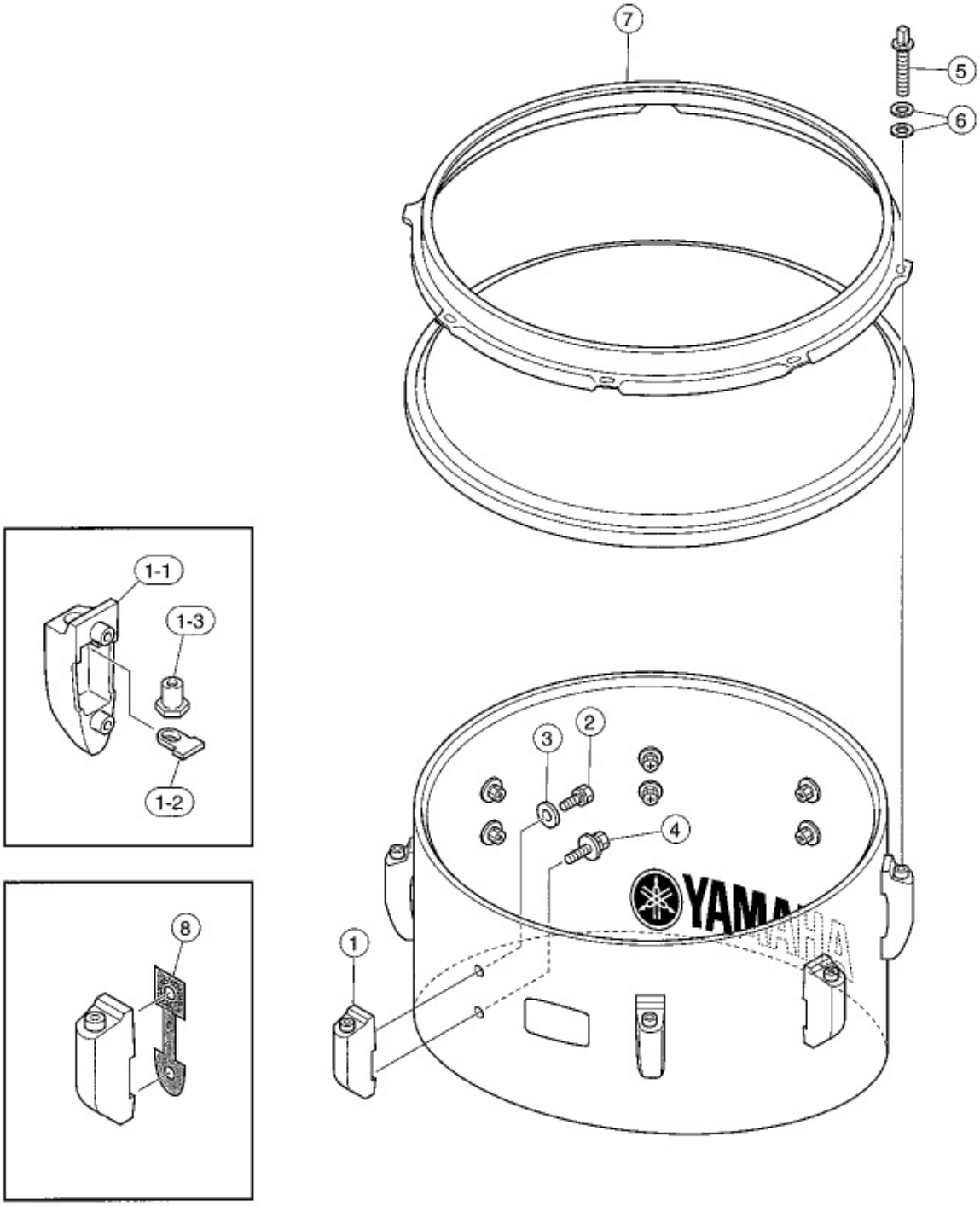

Model Name : MQ-8213

Ref No.	Parts No.(ChangeNo.)	English Name	Minimum Delivery	Accept order or not
1	U0031091	MQ-SP ARCHED LUG ASS'Y MQ82XX	1 PC	
1-1	U0032891	MQ-SP ARCHED LUG MQ82XX	1 PC	
1-2	U0037110	MQ-SP LUG INSERTION PIECE MQ82XX	1 PC	
1-3	U0033240	LUG NUT (4)	1 PC	
2	U0035470	HEXAGONAL BOLT M5X12ZY	1 PC	
3	U0123300	METAL WASHER SNARE STRAINER	1 PC	
4	U0035650	EXAGONAL BOLT M5X16/SPRING WASHER/SPRIN	1 PC	
5	U0043072	RIM TENSION ROD L=50	1 PC	
6	U0525710	METAL WASHER M(L) MS8014/8014C,210B,212B	1 PC	
7	U0066650	ULTRA HOOP 13X8H	1 PC	
8	U0147990	MQ-SP ARCHED LUG PLATE MQ82XX	1 PC	