Model Name : BS-7051

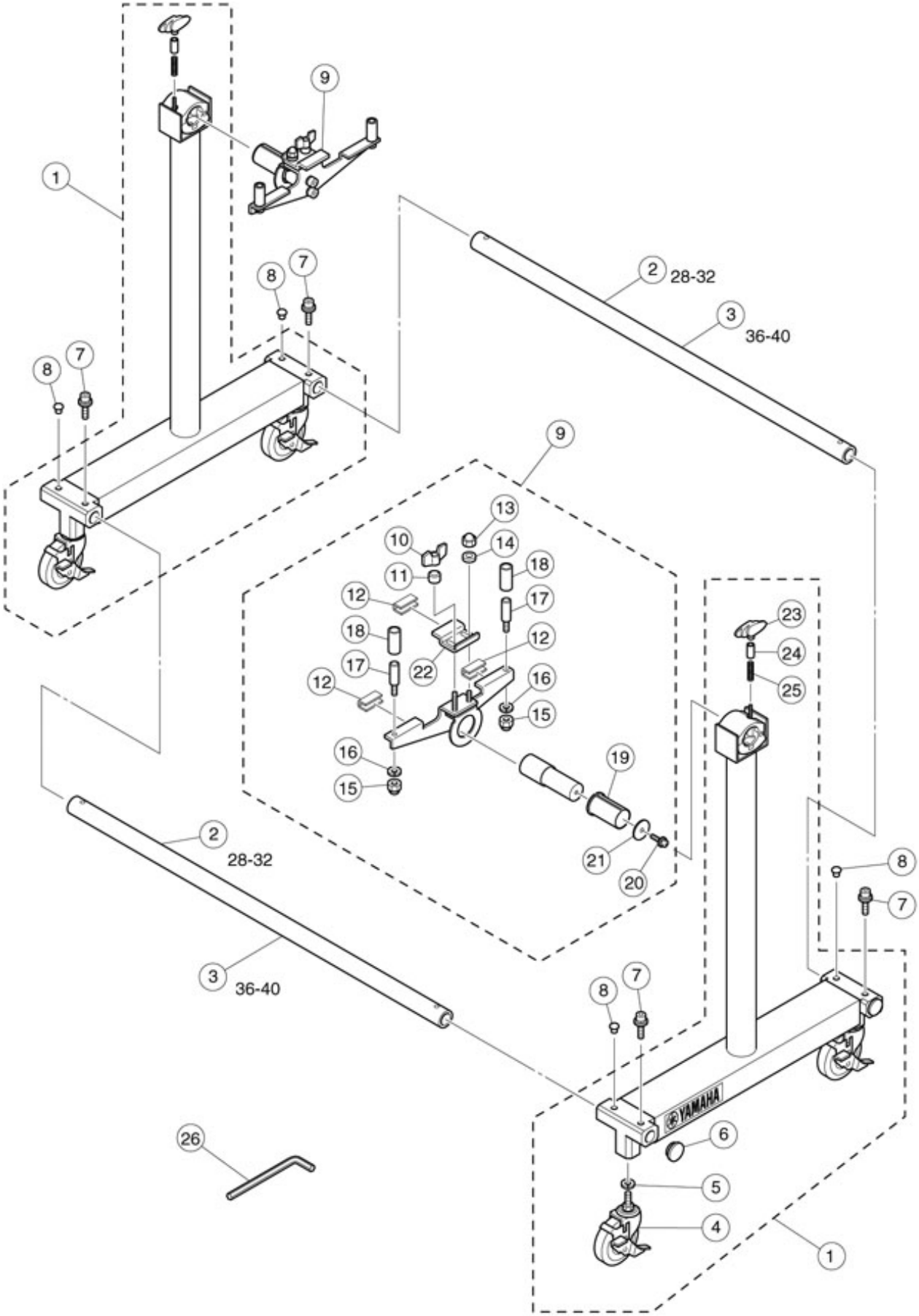

Concert Bass Drum Stand

Model Name : BS-7051

Ref No.	Parts No.(ChangeNo.)	English Name	Minimum Order Quantity	Accept order or not
1	ZJ969800	BS SUPPORT ASSY 4	1 PC	
10	U0123531	YAMAHA NUT M8 (S) CHN	1 PC	
11	ZJ971100	SPACER OD13XID8.2XT10	1 PC	
12	ZJ971700	LUG CUSHION BS 2	1 PC	
13	WT675900	U NUT 8.0 MFZN2P W/CAP	1 PC	Discontinued.
14	WT941700	FELT WASHER BS	1 PC	
15	W8104100	NUT HEXAGON CAP #1 6.0 MFZN2P	1 PC	
16	W8094200	SPRING WASHER #2 6.0 MFZN2P	1 PC	
17	W7933100	CLAMP SHAFT	1 PC	
18	W7974700	NOISE CANCELING TUBE BS	1 PC	
19	ZG977200	CLAMP SLEEVE BS BS	1 PC	
2	W7977500	BASE BAR ASSY BS 28-32	1 PC	
20	ZJ967700	+PAN HEAD SCREW SEMS S/PW6.0X15MFZN2P3	1 PC	
21	ZG977300	SLEEVE WASHER	1 PC	
22	ZJ967300	FINGER PROTECT PLATE BS	1 PC	
23	U0123350	WING NUT (L)M8 SS830	1 PC	
24	U0693360	BOLT COLLOR	1 PC	
25	U0693350	CLAMP SPRING SUS	1 PC	
26	U9900058	ALLEN WRENCH L=95	1 PC.	
4	WW751900	CASTER W/BRAKE SM75EM S-2	1 PC	
5	W8094700	SPRING WASHER U1/2 20 MFZN2P	1 PC	Discontinued.
6	W8021900	COUPLING BASE CAP BS 1	1 PC	
7	ZJ967500	BOLT HEXAGON SOCKET S/PW8.0X20MFZN2BL3	1 PC	
8	U0804290	BS COUPLING BASE CAP (2) BS750/752	1 PC	
9	ZJ967100	AXIS BASE ASSY BS	1 PC	