Model Name : MB-8224

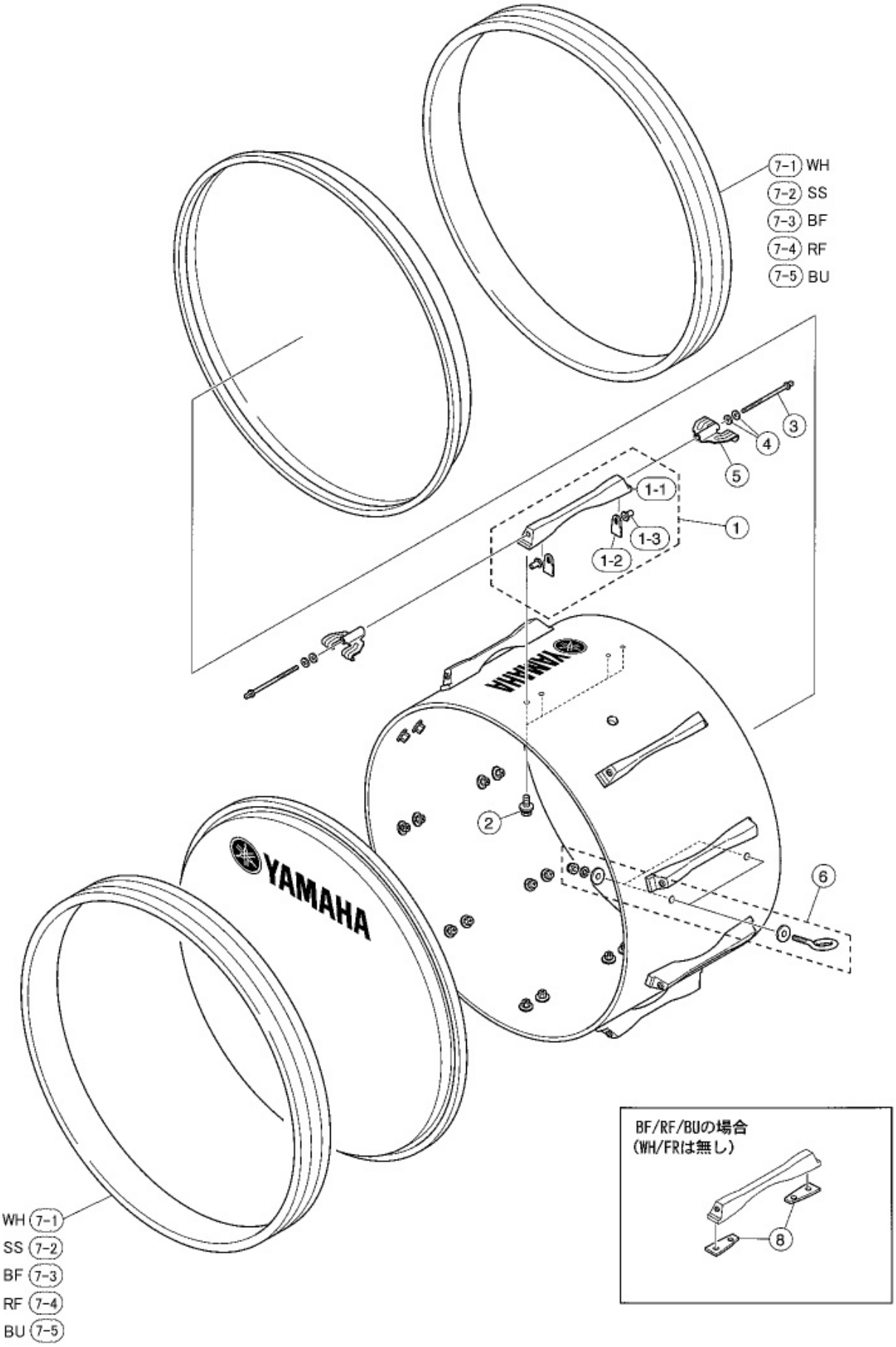

Model Name : MB-8224

Ref No.	Parts No.(ChangeNo.)	English Name	Minimum Delivery	Accept order or not
1	U0031081	MB-HT ARCHED LUG ASS'Y MB82XX	1 PC	
1-1	U0032881	MB-HT ARCHED LUG MB82XX	1 PC	
1-2	U0037100	MB-HT LUG INSERTION PIECE MB82XX	1 PC	
1-3	U0033240	LUG NUT (4)	1 PC	
2	U0035660	HEXAGONAL BOLT M5X14/SPRING WASHER	1 PC	
3	U0043202	TENSION ROD L=115 MB4XXB	1 PC	
4	U0525710	METAL WASHER M(L) MS8014/8014C,210B,212B	1 PC	
5	U0053140	MB RIM TENSION CLAW HOOK (F) MB82XX	1 PC	
6	U0363040	EYE HOOK (LARGE-2) ASS'Y	1 PC	
7-1	U0074551	MB WOOD RIM F40 24 (WH) MB8224	1 PC	
7-2	U0074552	MB WOOD RIM F40 24 (SS) MB8224	1 PC	Discontinued.
7-3	U0074553	MB WOOD RIM F40 24 (BF) MB8224	1 PC	
7-4	U0074554	MB WOOD RIM F40 24 (RF) MB8224	1 PC	
7-5	U0074555	MB WOOD RIM F40 24 (BU) MB8224	1 PC	
8	U0147980	MB-HT ARCHED LUG PLATE MB82XX	1 PC	