Model Name : CB-7024

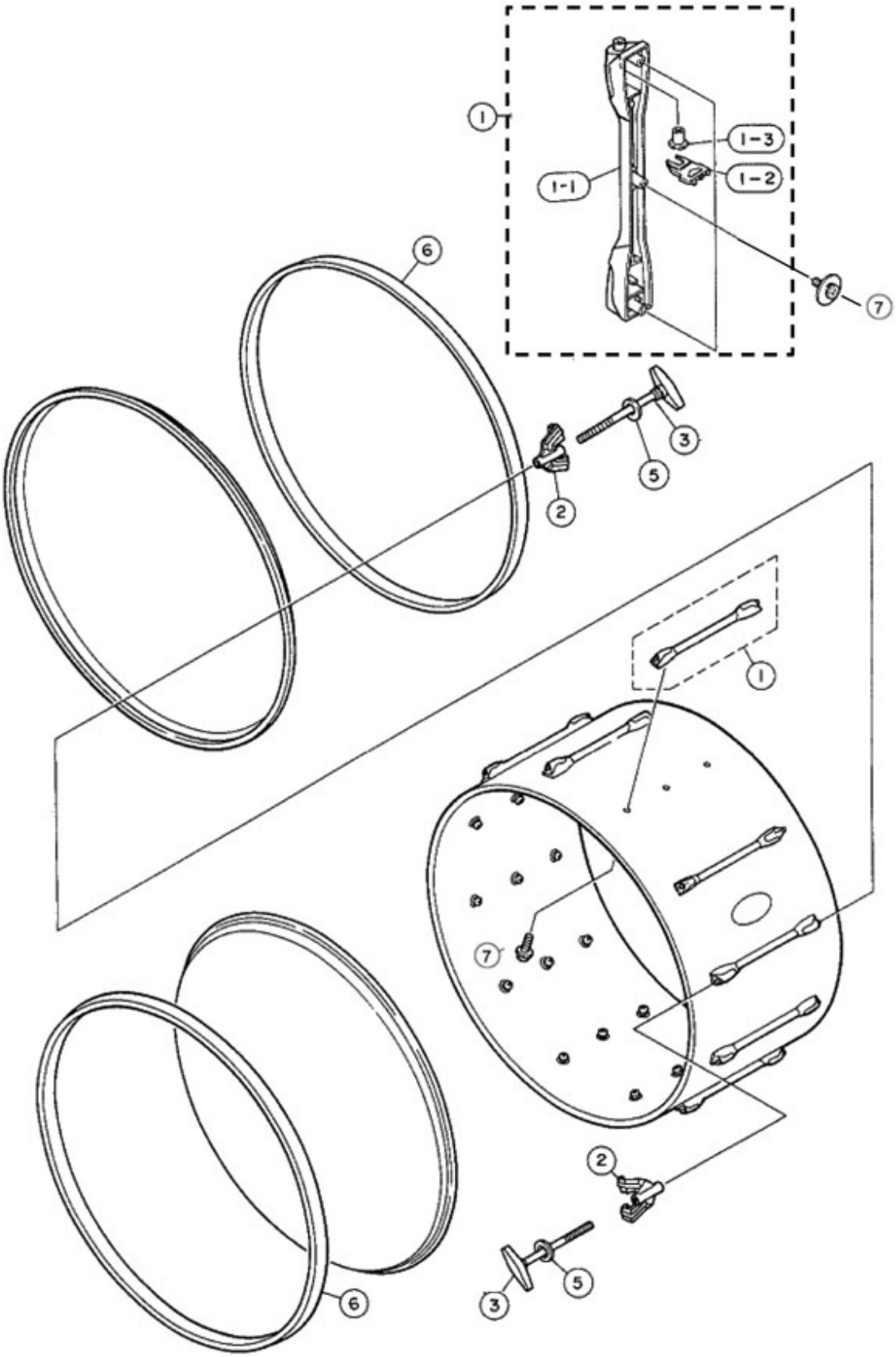

Model Name : CB-7024

Ref No.	Parts No.(ChangeNo.)	English Name	Minimum Order Quantity	Accept order or not
1	W8023210	HT LUG ASSY BD 2-MD CHN	1 PC	
1-1	W7709910	HT LUG BD 2-MD CHN	1 PC	
1-2	ZC625900	LUG NUT HOLD PLATE BD 4	1 PC	
1-3	W7991310	LUG NUT 4 CHN	1 PC	
2	W8006610	CLAW HOOK 6 CHN	1 PC	
3	U0043600	BD RIM TENSION ROD(6) L-100 11xx/15xx	1 PC	
5	W8020110	TENSION ROD WASHER M6 CHN	1 PC	
6	ZH422900	CB WOOD HOOP 24 W40 DKW	1 PC	
7	ZD216400	+ HEX BOLT SPC S/PW M4X12 MFZN2BL	1 PC	