Model Name : GSM-1465

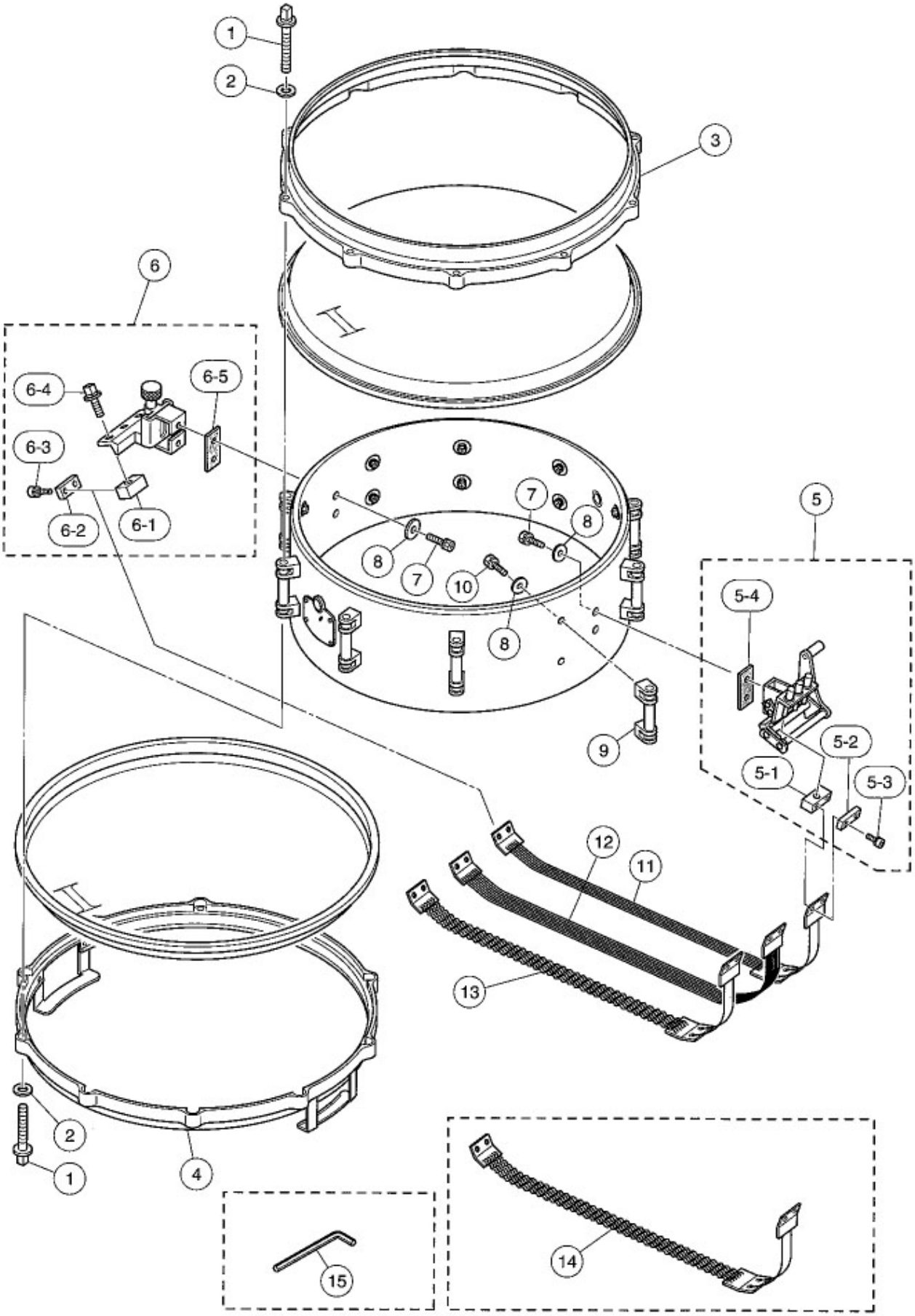

Model Name : GSM-1465

Ref No.	Parts No.(ChangeNo.)	English Name	Minimum Delivery	Accept order or not
1	U0043052	RIM TENSION ROD L=40	1 PC	
10	U0035550	HEXAGONAL BOLT M4X18 ZY	1 PC	
11	U0241410	SNARE SN-GSD (SW) ASSY	1 PC.	
12	U0241420	SNARE SN-GSD (BSW) ASSY	1 PC.	
13	U0241390	SNARE SN-GSD (BRASS) ASSY	1 PC.	
14	U0241400	SNARE SN-GSD (STEEL) ASSY	1 PC.	
15	U0565110	HEXAGON SOCKET SCREW KEY 2.5 ZP	1 PC.	
2	U0045010	WASHER	1 PC	
3	U0062150	ZN DIE-CAST HOOP 14X10H SD435DG	1 PC	
4	U0062160	ZN DIE-CAST HOOP 14X10HS SD435DG	1 PC	
5	U0201410	STRAINER RELEASE SIDE COMPLETE ASSY (J)	1 PC.	
5-1	U0204990	SNARE HOLDING BLOCK (J)	1 PC.	
5-2	U0205000	SNARE HOLDING PLATE (J)	1 PC.	
5-3	U0127490	HEXAGON SOCKET HEAD CAP SCREW M3x12 BL	1 PC.	
5-4	U0207560	STRANER (P)PLATE MSD0114.15.16.25TH	1 PC	
6	U0201420	STRAINER RELEASE SIDE COMPLETE ASSY (J)	1 PC.	
6-1	U0204990	SNARE HOLDING BLOCK (J)	1 PC.	
6-2	U0205000	SNARE HOLDING PLATE (J)	1 PC.	
6-3	U0127490	HEXAGON SOCKET HEAD CAP SCREW M3x12 BL	1 PC.	
6-4	U0603480	DRUM KEY BOLT M5X13 MSD-0104	1 PC	
6-5	U0207560	STRANER (P)PLATE MSD0114.15.16.25TH	1 PC	
7	U0035550	HEXAGONAL BOLT M4X18 ZY	1 PC	
8	U0123290	WASHER 4	1 PC	
9	U0031230	TUBE LUG 6.5inch	1 PC.	