Model Name : MQ-8206

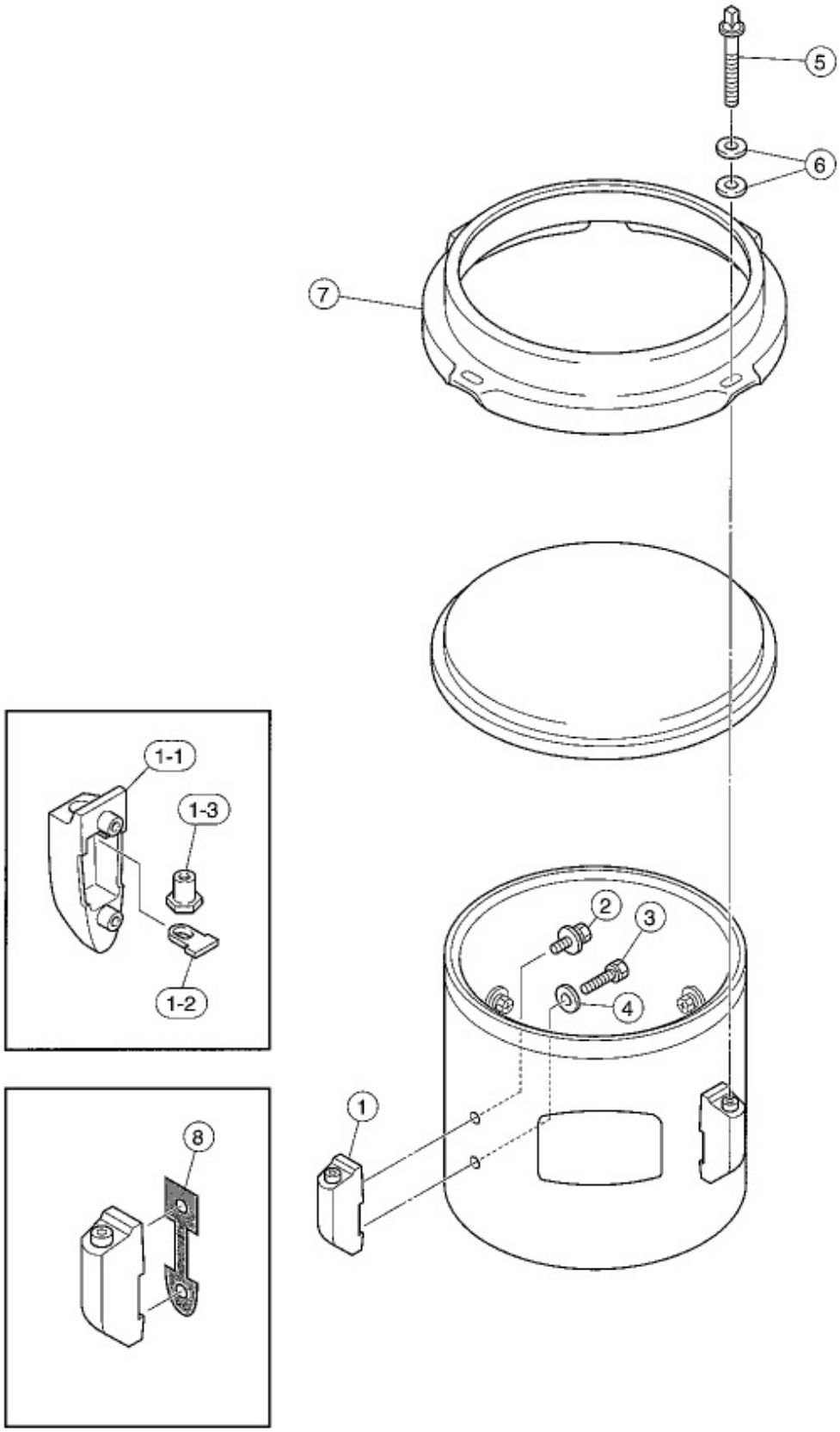

Model Name : MQ-8206

Ref No.	Parts No.(ChangeNo.)	English Name	Minimum Delivery	Accept order or not
1	U0031091	MQ-SP ARCHED LUG ASS'Y MQ82XX	1 PC	
1-1	U0032891	MQ-SP ARCHED LUG MQ82XX	1 PC	
1-2	U0037110	MQ-SP LUG INSERTION PIECE MQ82XX	1 PC	
1-3	U0033240	LUG NUT (4)	1 PC	
2	U0035660	HEXAGONAL BOLT M5X14/SPRING WASHER	1 PC	
3	U0035560	HEXAGONAL BOLT/WASHER M5X18 ZY	1 PC	
4	U0123300	METAL WASHER SNARE STRAINER	1 PC	
5	U0043072	RIM TENSION ROD L=50	1 PC	
6	U0525710	METAL WASHER M(L) MS8014/8014C,210B,212B	1 PC	
7	U0069100	ULTRA HOOP 6 X 4H	1 PC	
8	U0147990	MQ-SP ARCHED LUG PLATE MQ82XX	1 PC	