Model Name : SS745A

● SS745A

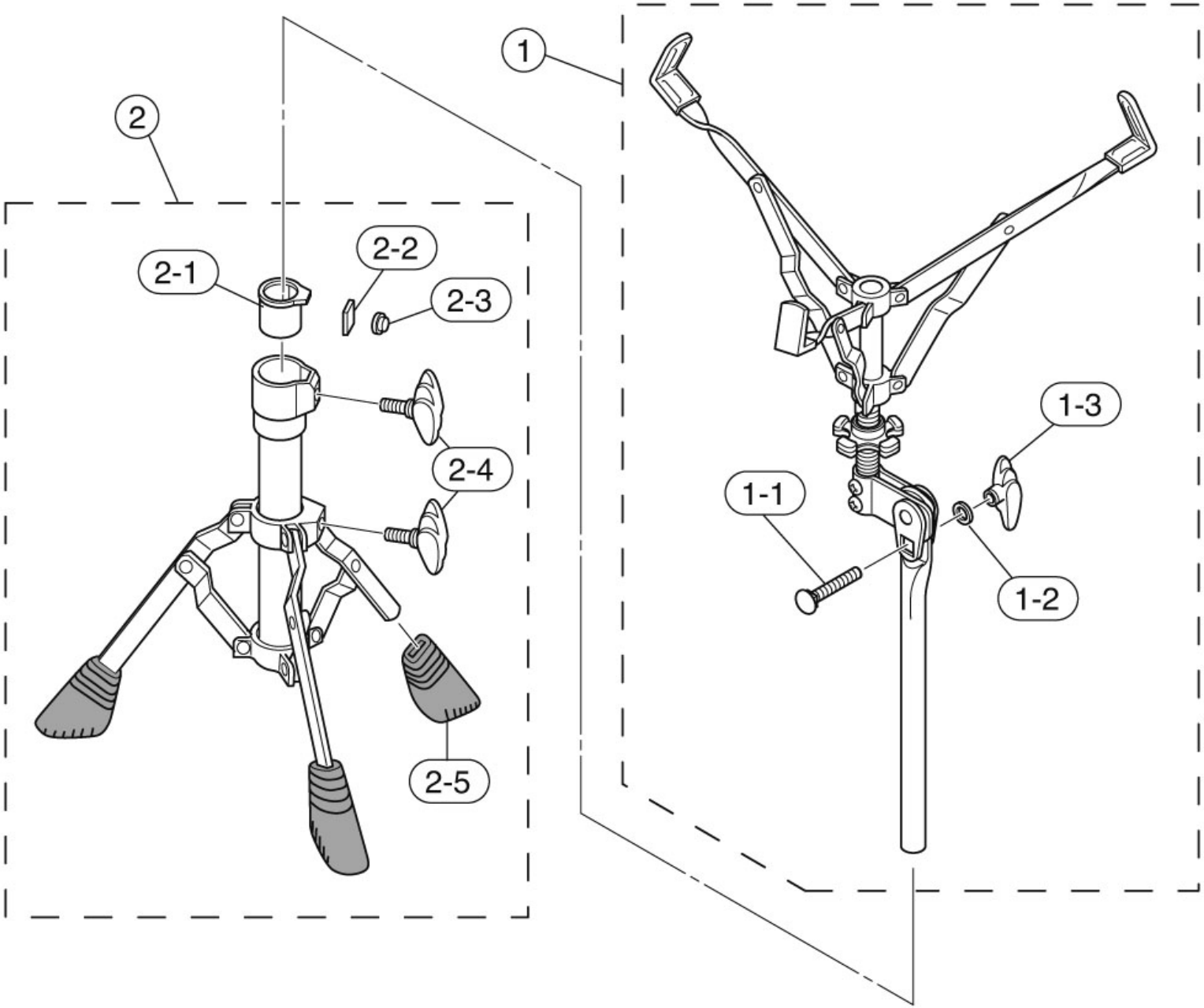

Model Name : SS745A

Ref No.	Parts No.(ChangeNo.)	English Name	Minimum Order Quantity	Accept order or not
1	U0641335	BASKET ASSY 22.2X470 CHN	1 PC	
1-1	U0653050	CARRIAGE BOLT L=31	1 PC	
1-2	U0525040	METAL WASHER EH-901	1 PC	
1-3	U0123350	WING NUT (L)M8 SS830	1 PC	
2	U0641005	LOWER BASE 28.6X335 ASSY CHN	1 PC	
2-1	U0607300	Nylon Bushing G(22) HS740	1 PC	
2-2	U0603650	Metal Pressure Insert G(22) HS740	1 PC	
2-3	U0603630	CLAMP BASE NUT SS940	1 PC	
2-4	U0123310	WING BOLT M8X15 SS-730/735/830/835	1 PC	
2-5	U0608100	RUBBER FOOT (10) SS-730 735 CS-730 735 H	1 PC	