Model Name : YCHS-7006

YCHS7006

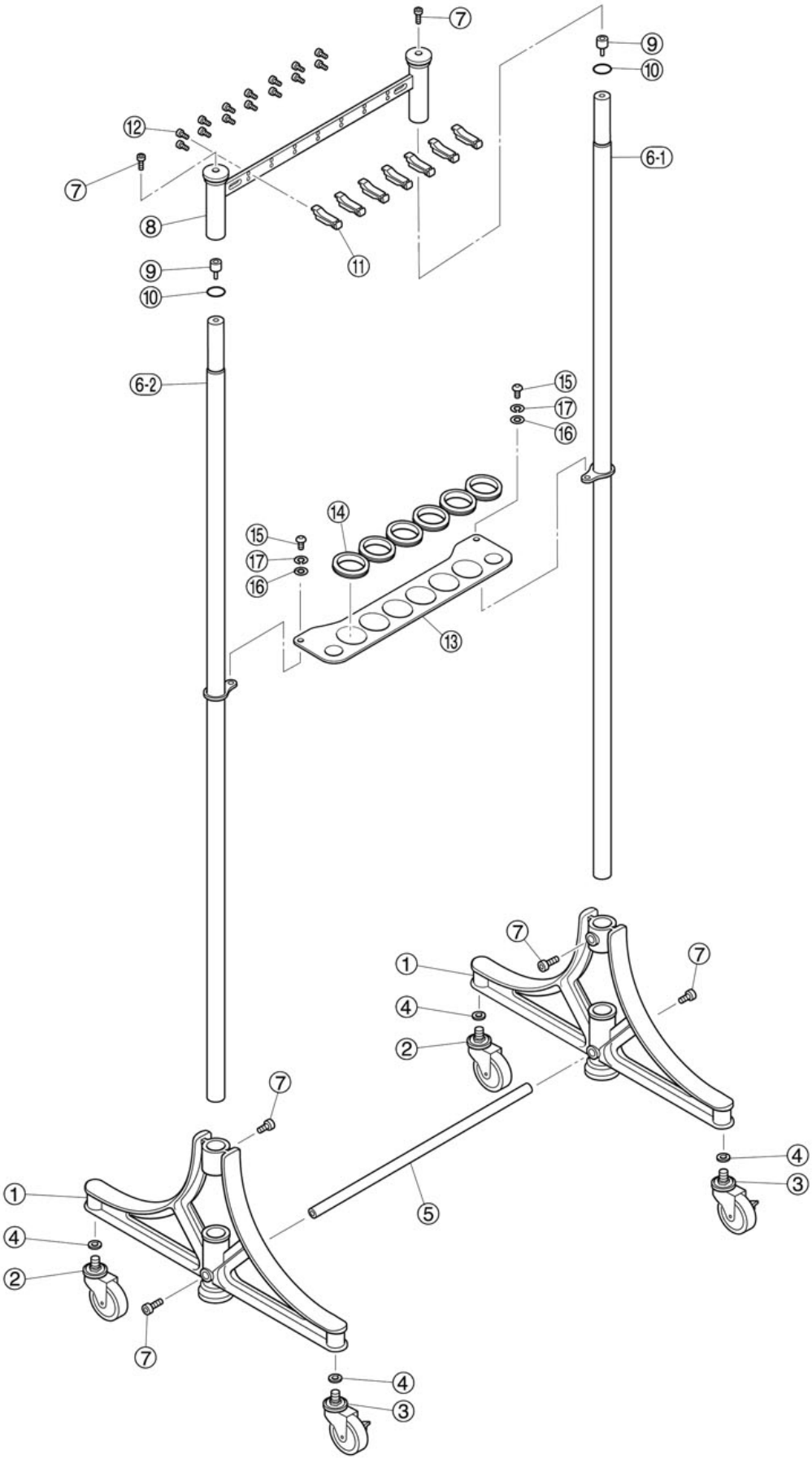

⑱ WRENCH(六角棒スパナ)

Model Name : YCHS-7006

Ref No.	Parts No.(ChangeNo.)	English Name	Minimum Order Quantity	Accept order or not
1	VAC15500	BASE YCHS7006	PC.	
10	ZY000200	O-RING P25.5	PC.	
11	ZY294200	HANGERPIN YCHS7006	PC.	
12	ZF184900	BOLT 4.0X12 MFZN2B3	1 PC	
13	ZY227500	GUIDE PLATE YCHS7006	PC.	
14	ZY226500	GUIDE DAMPER YCH7006	PC.	
15	VAM27600	BUTTON 8.0X12	PC.	
16	VAM27700	WASHER 8 8	PC.	
17	VAM28300	SPRING WASHER 8 8	PC.	
18	WH917400	WRENCH 5MM TP-43/63/73	1 PC	
2	ZY227600	CASTER 420A-1R75	PC.	
3	ZY227700	CASTER 415A-1R75	PC.	
4	WT670500	WASHER SPRING 1/2 IN MFZN2W3	1 PC.	
5	ZY226300	BASEBAR ASSY YCHS7006	PC.	
6-1	ZY226400	SIDE FRAME ASSY YCHS7006	PC.	
6-2	VDP82300	SIDE FRAME ASSY L YCHS7006	PC.	
7	ZY000700	BOLT 6.0X15 LT#202	PC.	
8	ZY235100	HANGER ASSY YCHS7006	PC.	
9	ZY000100	VD2-2015 VD2-2015	PC.	