Model Name : MB-8216

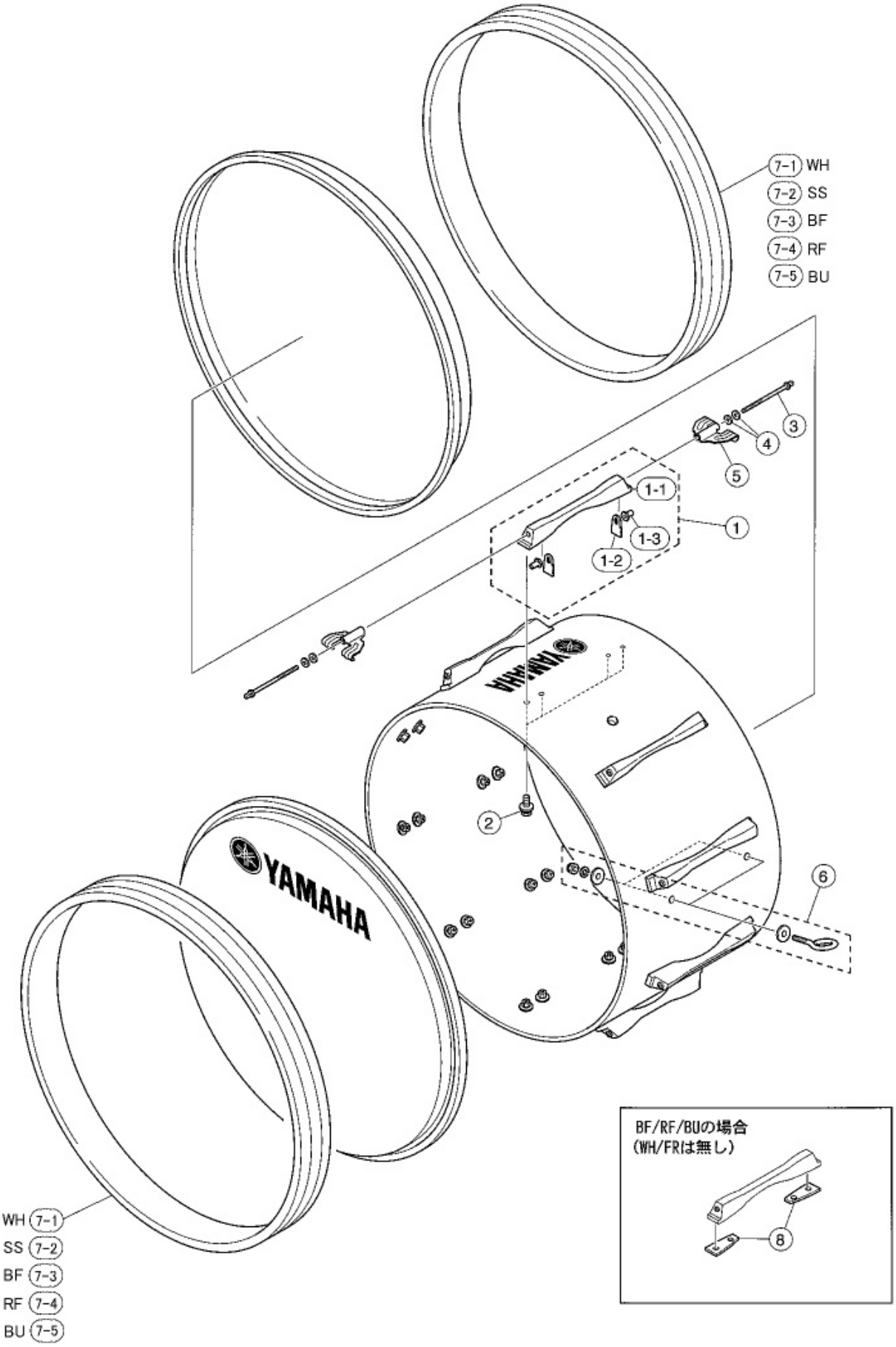

Model Name : MB-8216

Ref No.	Parts No.(ChangeNo.)	English Name	Minimum Delivery	Accept order or not
1	U0031081	MB-HT ARCHED LUG ASS'Y MB82XX	1 PC	
1-1	U0032881	MB-HT ARCHED LUG MB82XX	1 PC	
1-2	U0037100	MB-HT LUG INSERTION PIECE MB82XX	1 PC	
1-3	U0033240	LUG NUT (4)	1 PC	
2	U0035660	HEXAGONAL BOLT M5X14/SPRING WASHER	1 PC	
3	U0043202	TENSION ROD L=115 MB4XXB	1 PC	
4	U0525710	METAL WASHER M(L) MS8014/8014C,210B,212B	1 PC	
5	U0053140	MB RIM TENSION CLAW HOOK (F) MB82XX	1 PC	
6	U0363040	EYE HOOK (LARGE-2) ASS'Y	1 PC	
7-1	U0074511	MB WOOD RIM F40 16 (WH) MB8216	1 PC	
7-2	U0074512	MB WOOD RIM F40 16 (SS) MB8216	1 PC	
7-3	U0074513	MB WOOD RIM F40 16 (BF) MB8216	1 PC	
7-4	U0074514	MB WOOD RIM F40 16 (RF) MB8216	1 PC	
7-5	U0074515	MB WOOD RIM F40 16 (BU) MB8216	1 PC	
8	U0147980	MB-HT ARCHED LUG PLATE MB82XX	1 PC	