Model Name : MQ-6310U

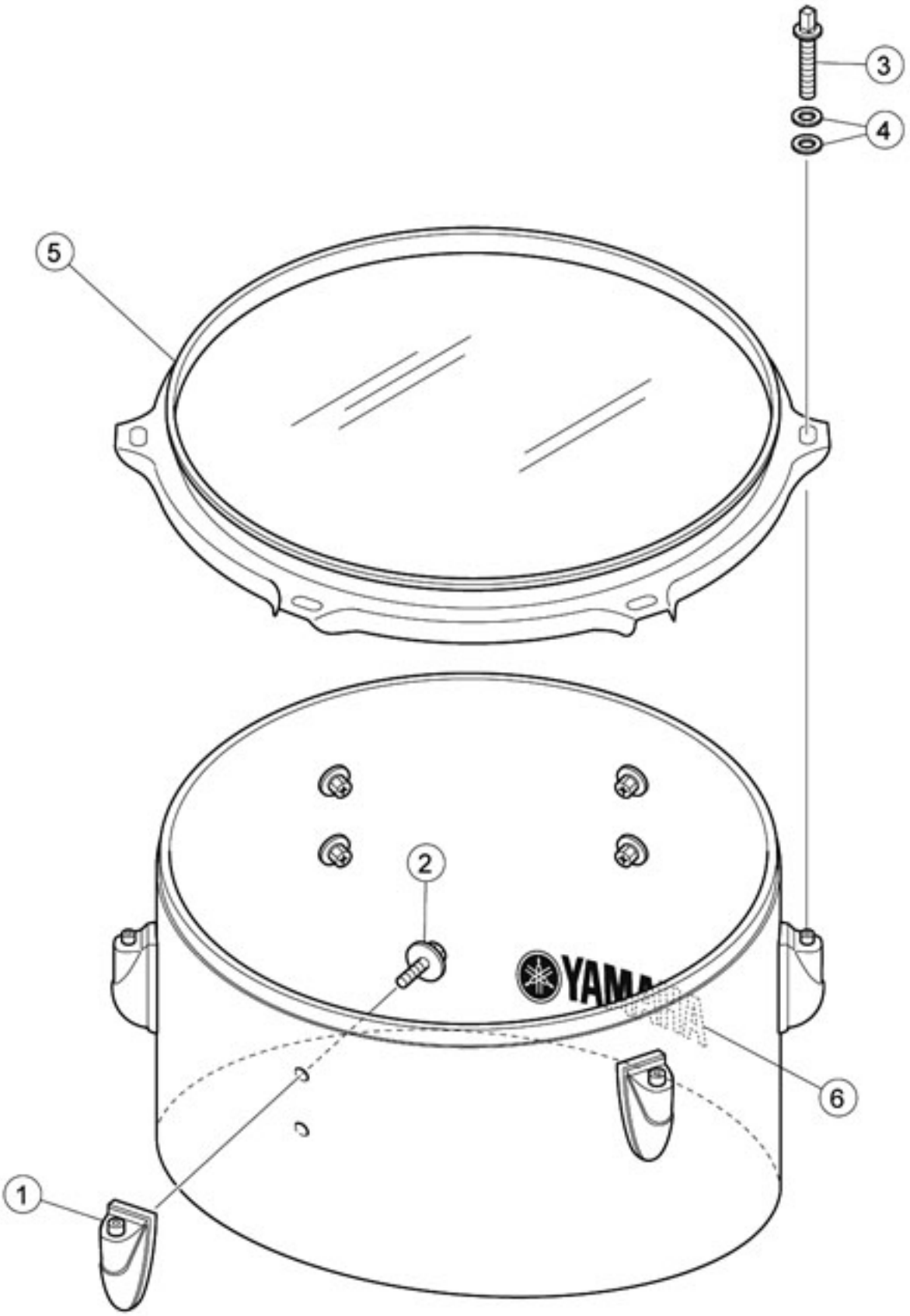

Model Name : MQ-6310U

Ref No.	Parts No.(ChangeNo.)	English Name	Minimum Order Quantity	Accept order or not
1	U0030547	FT,TT LUG (D-2)N ASS'Y	1 PC	
2	ZD216400	+ HEX BOLT SPC S/PW M4X12 MFZN2BL	1 PC	
3	U0043052	RIM TENSION ROD L=40	1 PC	Discontinued.
4	U0045070	METAL WASHER M6	1 PC	
5	U0066020	TRIPLE FLANGE HOOPS 10X6H	1 PC	
6	U0138121	YAMAHA LOGO STICKER(M-2) MQ	1 PC	